VT1195S

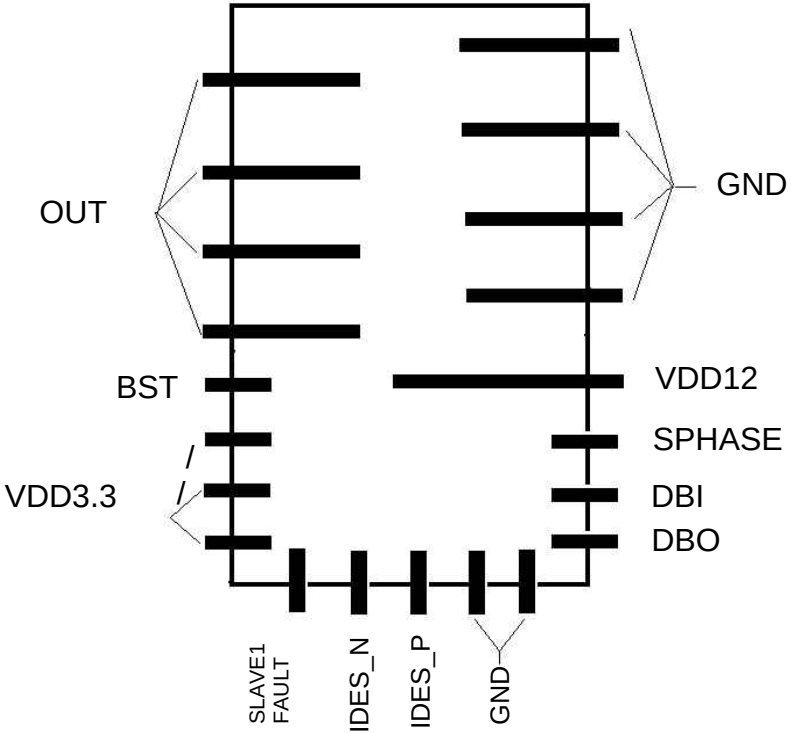
OUT
GND
BST
VDD12
SPHASE
VDD3.3
DBI
DBO
SLAVE1
FAULT
IDES_N
IDES_P
GND