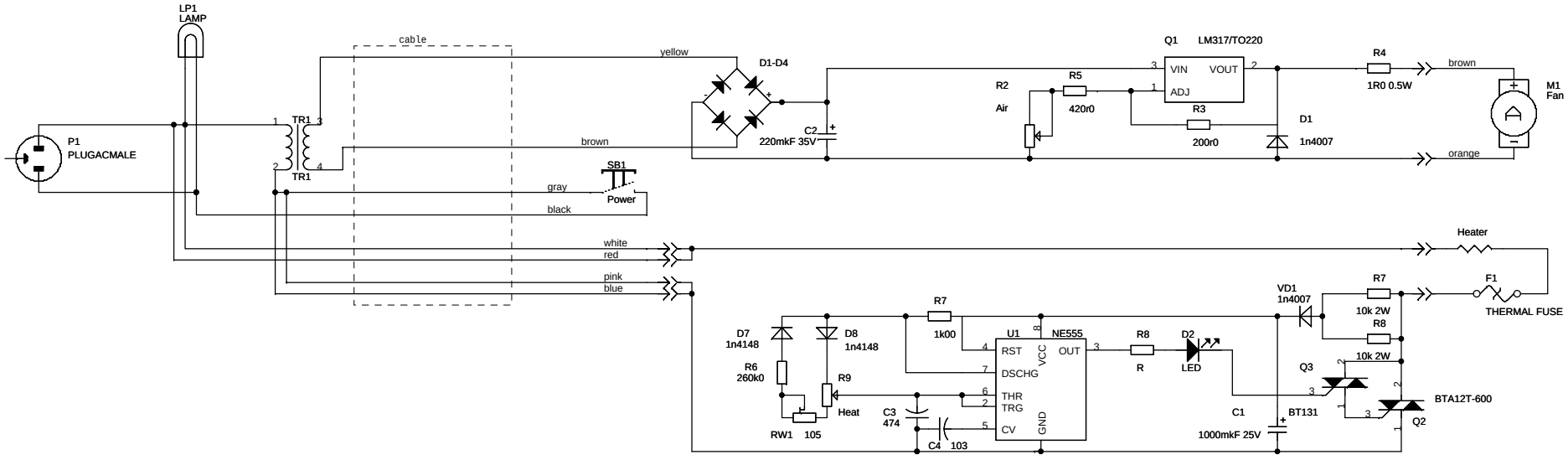

Title	AOYUE-8032	
Size A3	Document Number Solderstation	Rev 1.0
Date: Friday, December 01, 2006	Sheet 1 of 1	